ITEM NO.	PART NUMBER	DESCRIPTION	DESCRIPTION 2	QTY
1	FB-312-4000-2	BEAM, PULTRUDED STOCK	SERIES 4000 x 312 in, GRAY	1
2	TG0813-0053	BUSHING	13/16 in x 5-1/4 in	3
3	TG0813-0054	BUSHING	13/16 in x 3-1/4 in	4
4	FOAM	-	-	1
5	EC40-0006-2	END CAP	SERIES 4000, GRAY	2
6	DM-0006	MOUNT ASSEMBLY, DEADEND	4KLH	2
7	HB0750-0003	HEX BOLT	3/4 in - 10 x 6 in	4
8	LW0750-0001	LOCK WASHER	3/4 in	7
9	HN0750-0001	HEX NUT	3/4 in - 10	4
10	SW0813-0005	SQUARE WASHER	13/16 in, 4 in x 3/8 in	6
11	EN0750-0002	EYE NUT	3/4 in - 10	6
12	TR0750-0003	THREADED ROD	3/4 in - 10 x 9-1/2 in	3

PUPI®
www.pupicrossarms.com

REVISIONS				
ECO	REV.	DESCRIPTION	DATE	INITIALS
	1.0	CHANGE BEAM DESIGN TO COMPLY WITH PUPI 56H STANDARD	2016-03-08	RAF
1884	1.1	UPDATE DRAWING FORMAT	2016-08-25	RAF
3619	1.2	ADD LOAD RATINGS	2017-09-20	AJH
6038	2.0	UPDATE LOAD NOTES AND NOTE #4	2023-03-13	NDH

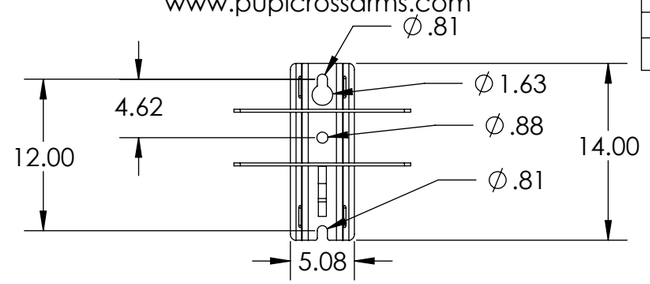

DETAIL -A-
SCALE 1 : 12

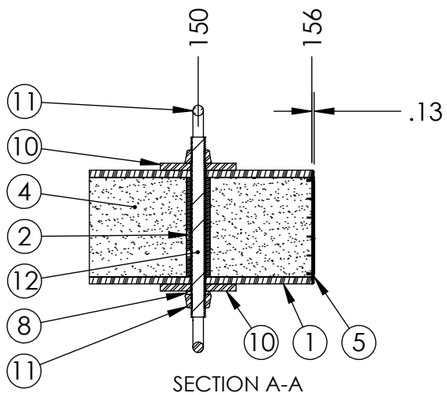

SECTION A-A
SCALE 1 : 8

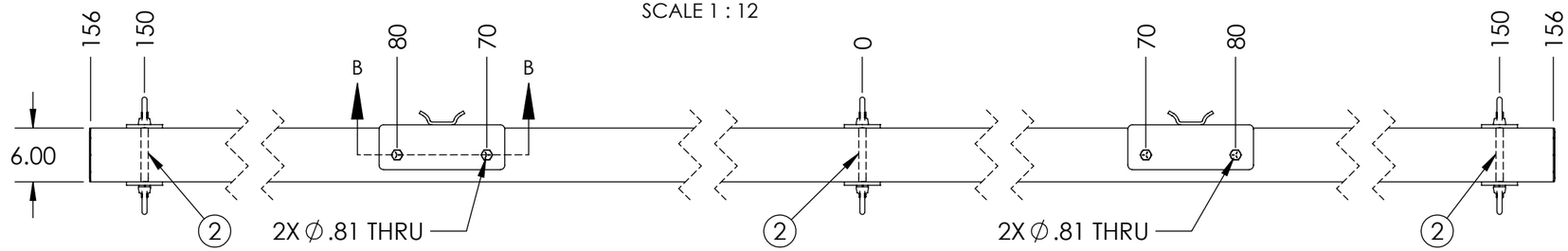

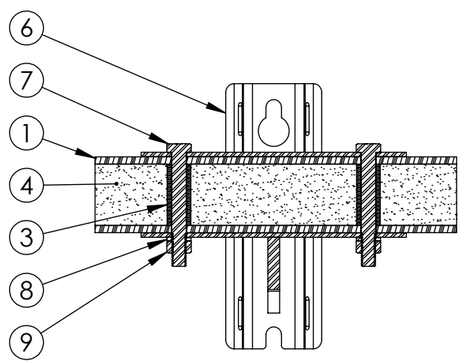

SECTION B-B
SCALE 1 : 8

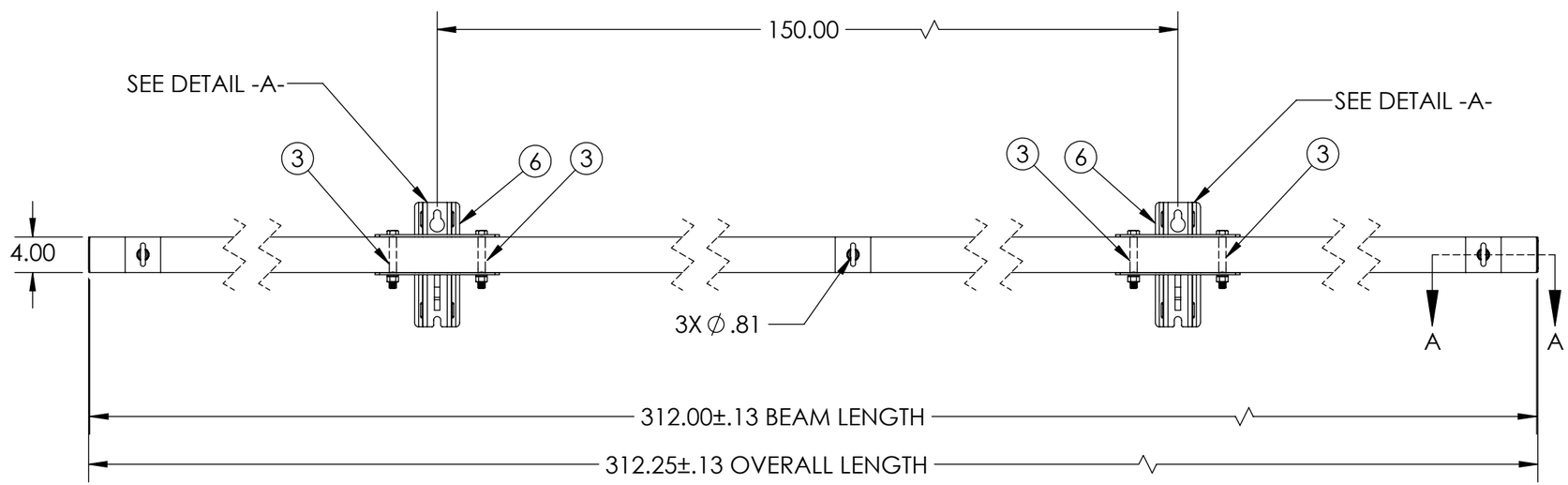

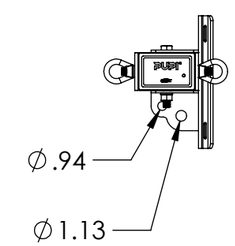

2.0

NOTES:
1. CENTER OF MOUNT HOLE(S) TO HOLES TOLERANCE ±0.06
2. CALCULATED ULTIMATE LONGITUDINAL LOAD = 12,500 LBS. PER WIRE, 3 WIRES
3. CALCULATED ULTIMATE VERTICAL LOAD = 5,250 LBS. PER WIRE, 3 WIRES
4. GEOTEK RECOMMENDS THAT FULLY FACTORED DESIGN TENSION AND WEIGHT PER WIRE, INCLUDING ALL OVERLOAD FACTORS, DOES NOT EXCEED 50% OF THE AVERAGE ULTIMATE STRENGTH PER WIRE OF THE CROSSARM

---UNLESS OTHERWISE SPECIFIED---
DIMENSIONS ARE IN INCHES
INTERPRET DIM AND TOL PER ASME Y14.5-2009
ANGULAR: MACH ±2°
BEND ±2°
ONE PLACE DECIMAL ±0.1
TWO PLACE DECIMAL ±0.02

STATE:	RELEASED	2023-05-11
DRAWN:	RAF	2016-08-25
CHECKED:	IAB	2023-03-13
APPROVED:	NDH	2023-05-11

REPLACES:
-

PROPRIETARY AND CONFIDENTIAL
THE INFORMATION CONTAINED IN THIS DRAWING IS THE SOLE PROPERTY OF GEOTEK. ANY REPRODUCTION IN PART OR AS A WHOLE WITHOUT THE WRITTEN PERMISSION OF GEOTEK IS PROHIBITED.

THIRD ANGLE PROJECTION

CUSTOMER SIGNATURE: DATE:

GEOTEK
A Whole New World of Composites
1421 SECOND AVE NW
STEWARTVILLE, MN 55976
(800) 533-1680
www.geotekinc.com

DESCRIPTION:
DEADEND ASSEMBLY, SERIES 4000
312 in, RUS 56

1.1

SIZE:	DWG. NO.	BEAM COLOR:	REV:
B	DD4000312E356H2	GRAY	2.0

SCALE: 1:16 | WEIGHT: 210 LBS | SHEET 1 OF 1